brembo

BRAKE DISC

DP 155

08.4899.10 B

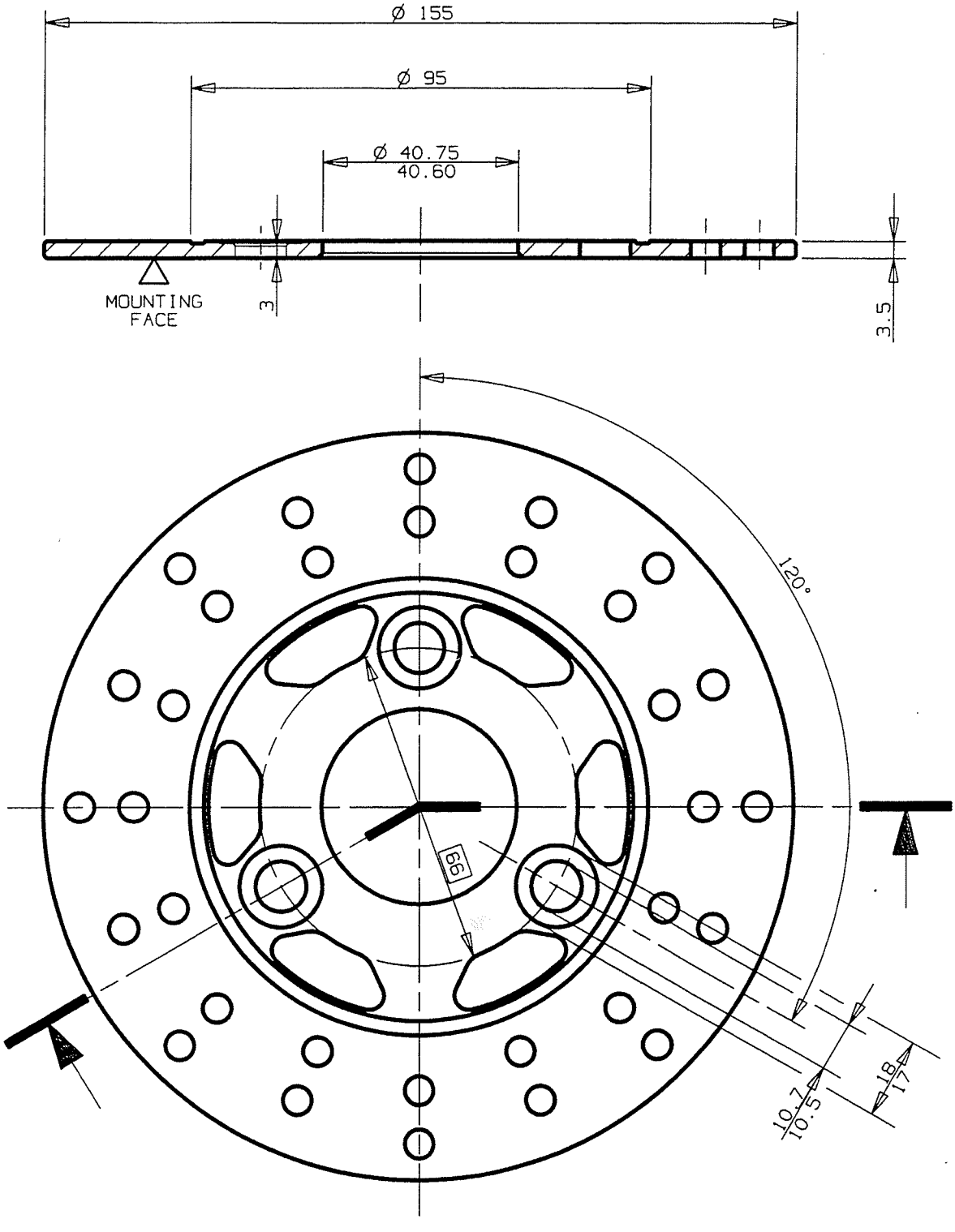

NOTE: minimum thickness value engraved on disc.

CHARACTERISTIC

MOUNTING BELL MATERIAL	MOUNTING BELL FINISHING	BRAKING SURFACE MATERIAL	BRAKING SURFACE FINISHING	MINIMUM THICKNESS	WEIGHT
Steel	Black Painting	Steel	Natural Steel	3,2 mm	0,4 Kg

Indicating informations subject to modification.
For further specifications contact Technical Section.

LAST UPDATE : 20/03/1995