brembo

FRONT MASTER CYLINDER

PS 13

10.4620.95

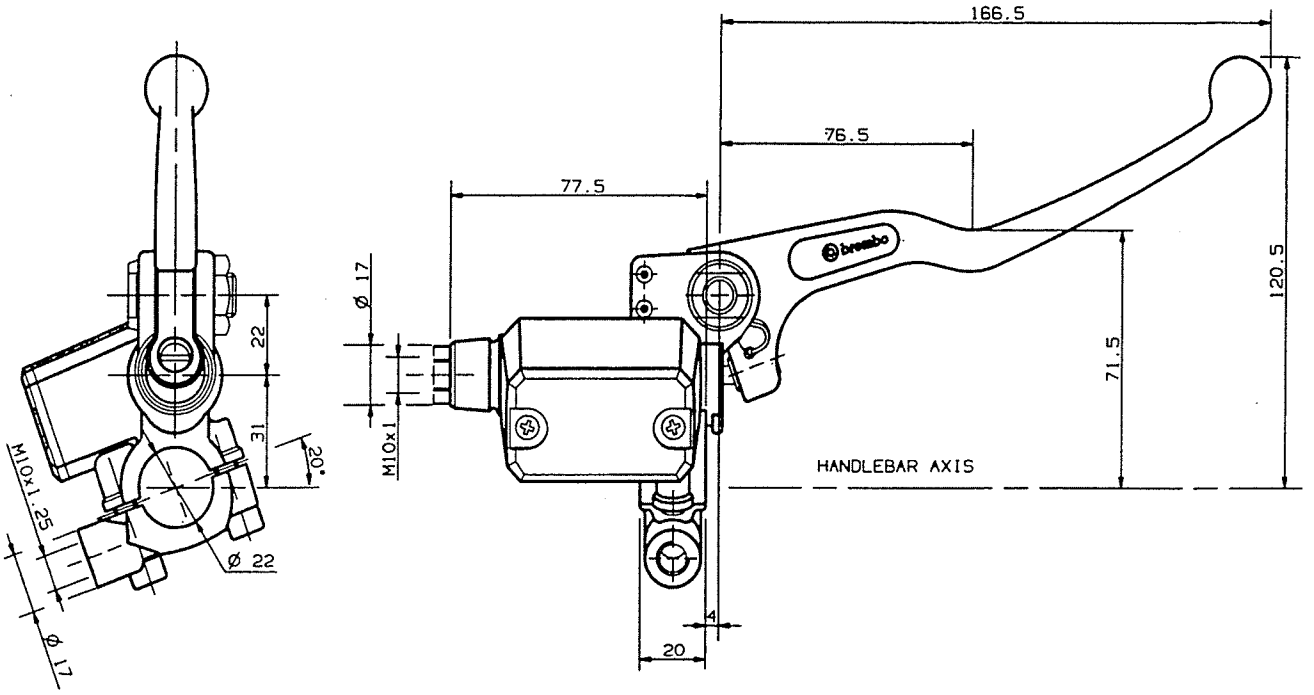

DESCRIPTION

Front master cylinder with incorporated reservoir.

Construction Material: Aluminium Alloy.

Operating fluid: brake fluid DOT4.

Clamp with seat for rearview mirror (Right thread).

Master cylinder BODY color:	Black Anodic Oxidation.
Master cylinder LEVER color:	Black Painting.

TECHNICAL CHARACTERISTICS

Piston diameter:	13.0 mm
Weight:	0.354 Kg
Reservoir volume:	19.5 cm³
Reservoir volume difference between MAX and MIN level:	11.0 cm³

AVAILABLE SPARE PARTS

CODE / SPARE PARTS	LEVER	CLAMP	CAP	LEVER PIN	WINDOW
10.4620.95	110.2706.50	110.4372.13	110.4308.60	110.2798.50	110.4533.10

Indicating informations subject to modification.
For further specifications contact Technical Section.

LAST UPDATE: 24/11/1994