FRONT MASTER CYLINDER

PS 16

10.5053.16

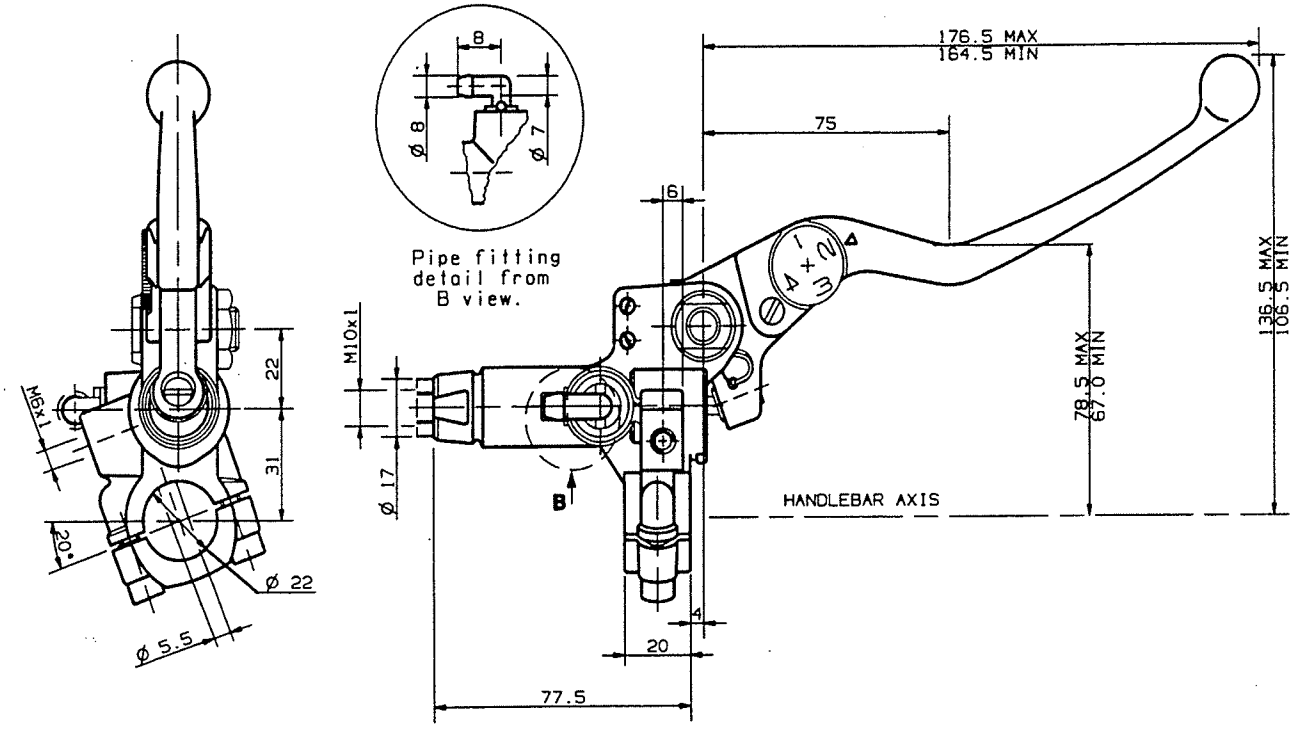

DESCRIPTION

Front master cylinder without incorporated reservoir.

Construction Material: Aluminium Alloy.

Operating fluid: brake fluid DOT4.

Pipe fitting can be oriented in the desired position.

Master cylinder BODY color: Black Anodic Oxidation.

Master cylinder LEVER color: Polishing and Bright Transparent Powder Painting.

TECHNICAL CHARACTERISTICS

Piston diameter:	16.0 mm
Weight:	0.265 Kg

AVAILABLE SPARE PARTS

CODE / SPARE PARTS	LEVER	CLAMP	PIPE FITTING	LEVER PIN
10.5053.16	110.2706.37	110.4732.12	110.3127.20	110.2798.50

Indicating informations subject to modification.
For further specifications contact Technical Section.

LAST UPDATE: 01/09/1994