brembo

CLUTCH MASTER CYLINDER

PR 16 A

X 94.32.00

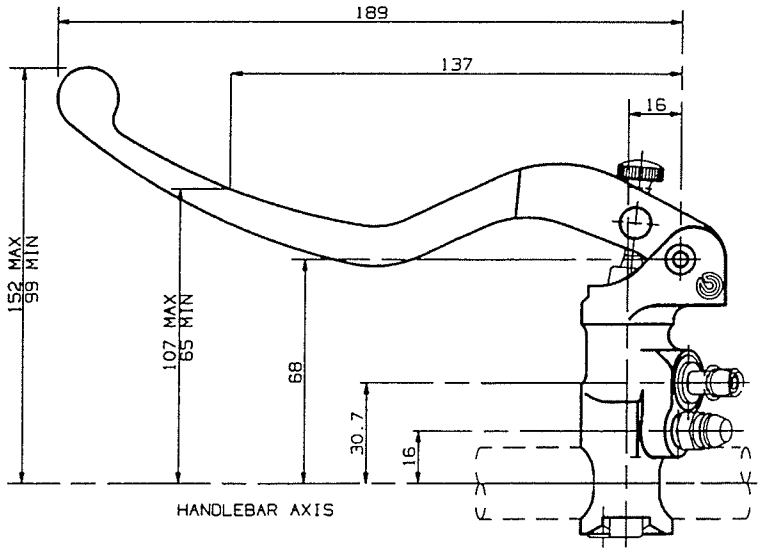

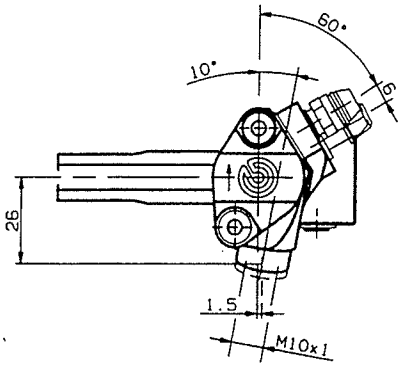

N.B.: View from B.

B

DESCRIPTION

Clutch master cylinder without incorporated reservoir, machined by forging.

Possibility to adjust lever opening.

Construction Material: Aluminium Alloy Hard Oxidation.

Operating fluid: fluid brake DOT4.

Master cylinder equipped with lever Code X 1.048.62

Master cylinder BODY color: Racing Color.

Master cylinder LEVER color: Black Anodic Oxidation.

TECHNICAL CHARACTERISTICS

Piston diameter:	16.0 mm
Weight:	0.286 Kg
Distance between centers:	16.0 mm

AVAILABLE SPARE PARTS

CODE / SPARE PARTS	LONG LEVER
X 94.32.00	X 1.048.81

Indicating informations subject to modification.
For further specifications contact Technical Section.

LAST UPDATE: 22/02/1995