brembo	CLUTCH MASTER CYLINDER	PR 16 A
		10.5800.10

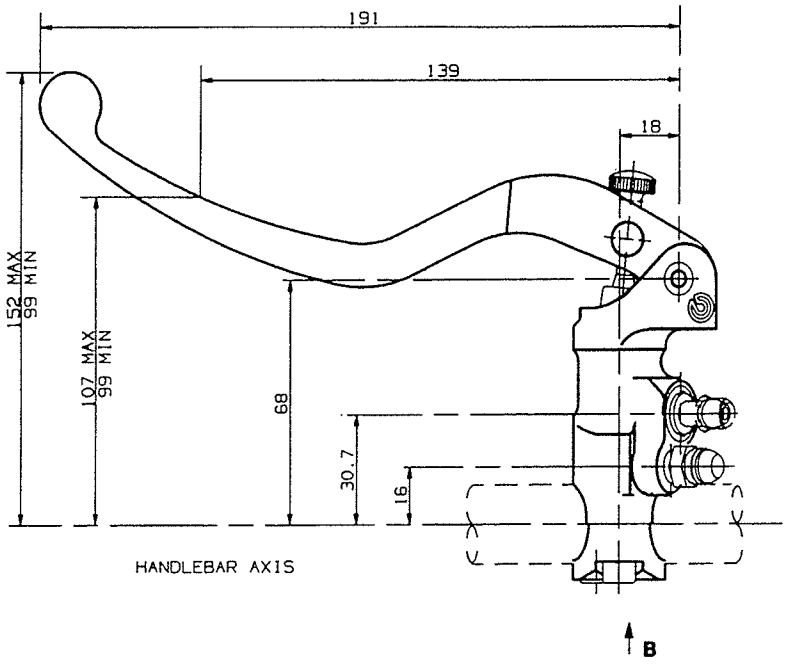

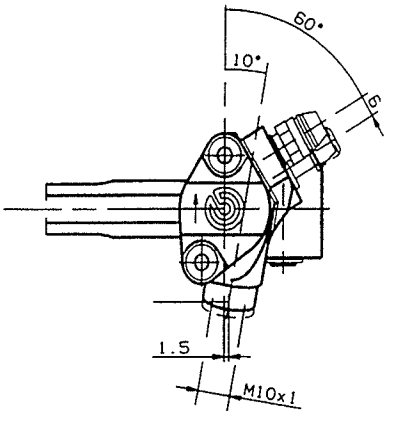

N.B.: View from B.

N.B.: Straight lever shape spare part Code 110.4594.63

DESCRIPTION

Clutch master cylinder without incorporated reservoir, machined by forging.

Possibility to adjust lever opening.

Construction Material: Aluminium Alloy Hard Oxidation.

Operating fluid: fluid brake DOT4.

Master cylinder equipped with lever Code 110.4594.61

Master cylinder BODY color: Colore Racing.

Master cylinder LEVER color: Black Anodic Oxidation.

TECHNICAL CHARACTERISTICS

Piston diameter:	16.0 mm
Weight:	0.286 Kg
Distance between centers:	18.0 mm

AVAILABLE SPARE PARTS

CODE / SPARE PARTS	LONG LEVER	STRAIGHT LEVER
10.5800.10	110.4594.61	110.4594.63

Indicating informations subject to modification.
For further specifications contact Technical Section.

LAST UPDATE: 27/01/1994